ISTRUZIONI D'USO E DI MANUTENZIONE
USE AND MAINTENANCE INSTRUCTIONS
INSTRUCTIONS D'UTILISATION ET D'ENTRETIEN
BETRIEBS- UND WARTUNGSHINWEISE
INSTRUCCIONES DE USO Y MANTENIMIENTO
BEDIENINGS- EN ONDERHOUDSHANDLEIDING

ISEO
ULTIMATE ACCESS TECHNOLOGIES

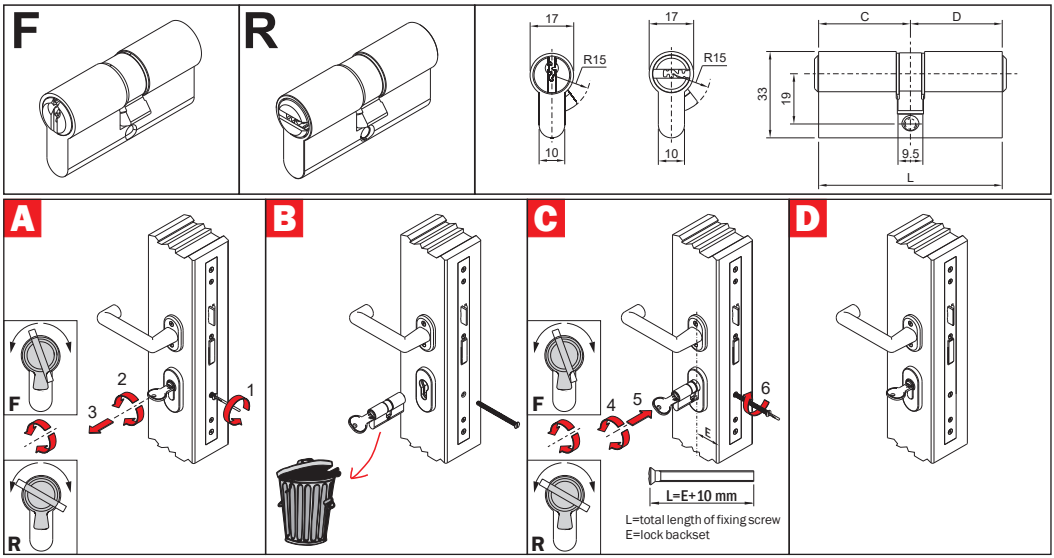

IT AVVERTENZE DI SICUREZZA

- Verificare che la confezione sia perfettamente integra e che la carta di proprietà (ove prevista) sia contenuta nell'apposita busta sigillata.
- Il prodotto non deve essere modificato in nessun modo
- Conservare la carta di proprietà in un luogo sicuro. In caso di furto o smarrimento si consiglia di sostituire l'intero cilindro.
- Per ragioni di sicurezza, la sporgenza esterna del cilindro non deve essere maggiore di 3 mm dal profilo o dall'eventuale ghiera o placca maniglia.
- Per aumentare il livello di protezione si consiglia di abbinare una borchia o placca di protezione.
- Si consiglia di non lasciare la chiave inserita dal lato interno in quanto in caso di emergenza, impedirebbe l'uso della chiave dal lato opposto. In alternativa può essere utilizzato un cilindro doppia funzione o frizionato.
- Non utilizzare la chiave per tirare la porta.
- Assicurarsi che il cilindro entri liberamente nel profilo e nella serratura.
- BSI Kitermak 3 stelle - La chiave deve sempre essere rimossa dal cilindro, anche dal lato interno, per non pregiudicare la sicurezza del prodotto
- I cilindri ISEO sono sottoposti ad uno scrupoloso controllo di qualità in tutto il ciclo produttivo secondo le procedure previste dalla norma EN ISO 9001.

INSTALLAZIONE

- Utilizzando la chiave, ruotare la camma affinché sia allineata al profilo del cilindro (Fig. C - 4)
- Inserire il cilindro senza forzare (Fig. C - 5)
- Fissare il cilindro con l'apposita vite di fissaggio in dotazione (Fig. C - 6)

USO CORRETTO

- Inserire completamente la chiave prima di procedere con la rotazione. Anticipare la rotazione potrebbe causare un malfunzionamento del cilindro o la rottura della chiave.
- La chiave deve sempre essere rimossa dal cilindro, anche dal lato interno, per non pregiudicare la sicurezza del prodotto.
- Nei cilindri doppia funzione o frizionati, è possibile lasciare sempre inserita la chiave dal lato interno, questa tipologia di cilindri infatti permette l'apertura dall'esterno anche con chiave inserita.
- Per lubrificare usare esclusivamente lubrificante tipo Rivolta TRS Plus o equivalente depositando una goccia di lubrificante sulla cifratura della chiave (consigliato ogni 5000 aperture)
- Il cilindro è testato e progettato per funzionare in un intervallo di temperatura da -25°C a + 80°C

CERTIFICAZIONI

I cilindri ISEO riportano sul corpo o sul minimo imballo la marcatura relativa alle certificazioni di prodotto ed alla classificazione raggiunta. Una tabella riepilogativa e le avvertenze collegate agli schemi di certificazione sono disponibili nella sezione prodotti del sito www.iseo.com. I cilindri BSI Kitemark una stella e SKG-IKOB due stelle devono essere usati insieme a ferramenta di sicurezza per porte a due stelle (SKG o Kitemark) per garantire la sicurezza. Per i cilindri a tre stelle non è richiesto alcun hardware di sicurezza specifico, ma l'installazione del prodotto in combinazione con l'hardware di sicurezza aumenterà ulteriormente la resistenza agli attacchi.

Iseo Serrature s.p.a.
Via San Girolamo 13
25055 Pisogne (BS)
Italy
Tel +39 0364 8821
Fax +39 0364 882263
iseo@iseo.com
www.iseo.com

EN SECURITY ADVERTISEMENT

- Check that the packaging is perfectly intact and that the Property Card (where applicable) is in its sealed envelope.
- Store the Property Card in a safe place. In the event of theft or loss, we suggest replacing the entire cylinder.
- For security reasons, the cylinder must not protrude more than 3 mm from the door profile, ring nut or handle plate.
- To increase the level of security, the use of security plate is suggested.
- It is advisable not to leave the key inserted from the inside as this would prevent the key from being used on the opposite side in an emergency. Alternatively, a double function or clutch cylinder can be used.
- Do not use the key to pull the door.
- Make sure that the cylinder fits freely in the door housing and in the lock.
- BSI Kitemark 3 stars - The key must always be removed from the cylinder, also from the inside, so as not to compromise the security of the product.
- ISEO cylinders are subjected to scrupulous quality control throughout the entire production cycle in accordance with the procedures of standard EN ISO 9001.

INSTALLATION

- Using the key, turn the cam so that it is aligned with the profile of the cylinder (Fig. C - 4).
- Insert the cylinder without forcing (Fig. C - 5).
- Secure the cylinder with the supplied fixing screw (Fig. C - 6).

CORRECT USE

- Insert the key completely before turning. Turning the key prematurely may cause the cylinder to malfunction or the key to break.
- The key must always be removed from the cylinder, even from the inside, so as not to compromise the security of the product.
- In the case of dual-function or clutched cylinders, you can always leave the key inserted from the inside, as this type of cylinder can be opened from the outside even when the key is inserted.
- To lubricate, use only lubricant such as Rivolta TRS Plus or equivalent, applying a drop of lubricant to the keyway (recommended every 5000 openings).
- The cylinder is tested and designed to operate in a temperature range from -25°C to +80°C.

CERTIFICATIONS

ISEO cylinders are marked on the body or on the minimum packaging with the product certification and classification achieved. A summary table and warnings related to the certification schemes can be found in the product section of the www.iseo.com website. BSI Kitemark one star and SKG-IKOB two stars cylinders must be used in conjunction with two stars (SKG or Kitemark) security door hardware to ensure security. Three stars cylinders no specific security hardware is required but installing the product in conjunction with security hardware will increase attack resistance still further.

FR ANNONCE DE SÉCURITÉ

- Vérifiez que l'emballage est parfaitement intact et que la carte de propriété (le cas échéant) est dans son enveloppe scellée.
- Conservez la carte de propriété dans un endroit sûr. En cas de vol ou de perte, nous vous conseillons de remplacer l'ensemble du cylindre.
- Pour des raisons de sécurité, le cylindre ne doit pas dépasser de plus de 3 mm le profil de la porte, la bague ou la plaque de la poignée.
- Pour augmenter le niveau de sécurité, l'utilisation d'une plaque de sécurité est suggérée.
- Il est conseillé de ne pas laisser la clé insérée de l'intérieur, car cela empêcherait d'utiliser la clé du côté opposé en cas d'urgence. Il est également possible d'utiliser un cylindre à double fonction ou à embrayage.
- N'utilisez pas la clé pour tirer la porte.
- Assurez-vous que le cylindre s'adapte librement dans le boîtier de la porte et dans la serrure.
- BSI Kitemark 3 étoiles La clé doit toujours être retirée du cylindre, même du côté interne, pour ne pas compromettre la sécurité du produit.
- Les cylindres ISEO sont soumis à un contrôle de qualité scrupuleux tout au long du cycle de production, conformément aux procédures de la norme EN ISO 9001.

INSTALLATION

- A l'aide de la clé, tournez la came de manière à ce qu'elle soit alignée avec le profil du cylindre (Fig. C - 4).
- Insérez le cylindre sans forcer (Fig. C - 5).
- Fixez le cylindre avec la vis de fixation fournie (Fig. C - 6).

UTILISATION CORRECTE

- Insérez complètement la clé avant de la tourner. Une rotation prématurée de la clé peut entraîner un mauvais fonctionnement du cylindre ou la rupture de la clé.
- La clé doit toujours être retirée du cylindre, même de l'intérieur, afin de ne pas compromettre la sécurité du produit.
- Dans le cas des cylindres à double fonction ou à embrayage, vous pouvez toujours laisser la clé insérée de l'intérieur, car ce type de cylindre peut être ouvert de l'extérieur même si la clé est insérée.
- Pour la lubrification, utilisez uniquement un lubrifiant tel que Rivolta TRS Plus ou équivalent, en appliquant une goutte de lubrifiant sur la rainure de la clé (recommandé toutes les 5000 ouvertures).
- Le cylindre est testé et conçu pour fonctionner dans une plage de température allant de -25°C à +80°C.

CERTIFICATIONS

Les cylindres ISEO sont marqués sur le corps ou sur l'emballage minimum avec la certification du produit et la classification obtenue. Un tableau récapitulatif et des avertissements relatifs aux systèmes de certification sont disponibles dans la section produit du site www.iseo.com. Les cylindres BSI Kitemark une étoile et SKG-IKOB à deux étoiles doivent être utilisés en association avec une quincaillerie de porte de sécurité à deux étoiles (SKG ou Kitemark) pour garantir la sécurité. Les cylindres à trois étoiles ne nécessitent pas de matériel de sécurité spécifique, mais l'installation du produit en conjonction avec du matériel de sécurité augmentera encore la résistance aux attaques.

ES ANUNCIO DE SEGURIDAD

- Compruebe que el embalaje está perfectamente intacto y que la tarjeta de propiedad (si es el caso) está en su sobre cerrado.
- Guarde la tarjeta de propiedad en un lugar seguro. En caso de robo o pérdida, se recomienda sustituir todo el cilindro.
- Por razones de seguridad, el cilindro no debe sobresalir más de 3 mm del perfil de la puerta, el anillo o la placa de la manilla.
- Para aumentar el nivel de seguridad, se sugiere el uso de una placa de seguridad.
- Es aconsejable no dejar la llave introducida desde el interior, ya que esto impediría utilizar la llave en el lado opuesto en caso de emergencia. También es posible utilizar un cilindro de doble función o de embrague.
- No utilice la llave para tirar de la puerta.
- Asegúrese de que el cilindro encaja sin problemas en el alojamiento de la puerta y la cerradura.
- BSI Kitemark 3 estrellas - La llave siempre debe quitarse del cilindro, incluso del lado interno, para no perjudicar la seguridad del producto.
- Los cilindros ISEO se someten a un estricto control de calidad durante todo el ciclo de producción, de acuerdo con los procedimientos de la norma EN ISO 9001.

INSTALACIÓN

- Con la llave, gire la leva para que quede alineada con el perfil del cilindro (Fig. C - 4).
- Introduzca el cilindro sin forzarlo (Fig. C - 5).
- Asegure el cilindro con el tornillo de fijación suministrado (Fig. C - 6).

USO CORRECTO

- Introduzca la llave completamente antes de girarla. Girar la llave antes de tiempo puede provocar el mal funcionamiento del cilindro o la rotura de la llave.
- La llave debe sacarse siempre del cilindro, incluso desde el interior, para no comprometer la seguridad del producto.
- En el caso de los cilindros de doble función o con embrague, siempre se puede dejar la llave introducida desde el interior, ya que este tipo de cilindros pueden abrirse desde el exterior incluso con la llave introducida.
- Para la lubricación, utilice únicamente un lubricante como el Rivolta TRS Plus o equivalente, aplicando una gota de lubricante en el chavetero (se recomienda cada 5000 aperturas).
- El cilindro está probado y diseñado para funcionar en un rango de temperaturas de -25°C a +80°C.

CERTIFICACIONES

Las cilindros ISEO están marcados en el cuerpo o en el embalaje mínimo con la certificación del producto y la clasificación obtenida. En la sección de productos del sitio web www.iseo.com se puede encontrar un cuadro resumen y advertencias relacionadas con los sistemas de certificación. Los cilindros BSI Kitemark una estrella y SKG-IKOB de dos estrellas deben utilizarse junto con los herrajes de seguridad de dos estrellas (SKG o Kitemark) para garantizar la seguridad. Los cilindros de tres estrellas no requieren ningún herraje de seguridad específico, pero la instalación del producto junto con un herraje de seguridad aumentará aún más la resistencia a los ataques.

DE SICHERHEITSHINWEISE

- Stellen Sie sicher, dass die Verpackung unversehrt ist und dass sich die Sicherungskarte (sofern vorhanden) im versiegelten Umschlag befindet.
- Bewahren Sie die Sicherungskarte an einem sicheren Ort auf. Bei Diebstahl oder Verlust empfehlen wir, den gesamten Zylinder auszutauschen.
- Aus Sicherheitsgründen darf der Zylinder nicht mehr als 3 mm aus dem Türprofil, dem Ring oder dem Türschild herausragen.
- Um die Sicherheit zu erhöhen, wird die Verwendung eines Sicherheitsblechs empfohlen.
- Wir empfehlen, den Schlüssel nicht von innen stecken zu lassen, da dadurch im Notfall die Nutzung des Schlüssels auf der anderen Seite nicht möglich ist. Alternativ kann ein Zylinder mit Doppelfunktion oder ein Kupplungszylinder verwendet werden.
- Nutzen Sie den Schlüssel nicht, um die Tür zu bewegen.
- Achten Sie darauf, dass der Zylinder frei im Türgehäuse und im Schloss sitzt.
- BSI Kitemark 3 Sterne - Der Schlüssel muss immer aus dem Zylinder gezogen werden, auch von der Innenseite, um die Sicherheit des Produkts nicht zu beeinträchtigen.
- ISEO-Zylinder unterliegen während des gesamten Produktionszyklus einer strengen Qualitätskontrolle gemäß den Verfahren der Norm EN ISO 9001.

INSTALLATION

- Drehen Sie den Schließbart mit dem Schlüssel so, dass er mit dem Profil des Zylinders übereinstimmt (Abb. C - 4).
- Setzen Sie den Zylinder ohne Gewaltanwendung ein (Abb. C - 5).
- Sichern Sie den Zylinder mit der mitgelieferten Befestigungsschraube (Abb. C - 6).

RICHTIGE VERWENDUNG

- Führen Sie den Schlüssel vor dem Drehen vollständig ein. Ein vorzeitiges Drehen des Schlüssels kann zu einer Fehlfunktion des Zylinders oder zum Bruch des Schlüssels führen.
- Der Schlüssel muss immer aus dem Zylinder gezogen werden, auch von innen, um die Sicherheit des Produkts nicht zu beeinträchtigen.
- Bei Doppelfunktions- oder Kupplungszylindern können Sie den Schlüssel von innen stecken lassen, da diese Art von Zylindern auch dann von außen geöffnet werden kann , wenn der Schlüssel auf der Innenseite steckt.
- Verwenden Sie zum Schmieren ausschließlich ein Schmiermittel wie Rivolta TRS Plus oder ein gleichwertiges Mittel, indem Sie einen Tropfen des Schmiermittels auf das Schlüsselprofil auftragen (empfohlen alle 5000 Öffnungen).
- Der Zylinder ist für den Betrieb in einem Temperaturbereich von -25° C bis +80° C getestet und ausgelegt.

ZERTIFIZIERUNGEN

Auf dem Gehäuse oder der Verpackung von ISEO-Zylindern sind alle zutreffenden Produktzertifizierung und-klassifizierung aufgeführt. Eine Übersichtstabelle und Warnhinweise zu den Zertifizierungssystemen finden Sie im Produktbereich der Website www.iseo.com. Zylinder mit BSI Kitemark ein Stern und SKG-IKOB zwei Sterne müssen in Verbindung mit einem Zwei-Sterne-Sicherheitsbeschlag (SKG oder Kitemark) verwendet werden, um die Sicherheit zu gewährleisten. Bei Drei-Sterne-Zylindern ist kein spezieller Sicherheitsbeschlag erforderlich, aber die Installation des Produkts in Verbindung mit einem Sicherheitsbeschlag erhöht den Angriffswiderstand noch weiter.

NL VEILIGHEIDSADVERTENTIES

- Controleer of de verpakking perfect intact is en of de Property Card (indien van toepassing) in de verzegelde envelop zit.
- Bewaar de Property Card op een veilige plaats. Bij diefstal of verlies raden wij aan om de hele cilinder te vervangen.
- Om veiligheidsredenen mag de cilinder niet meer dan 3 mm uit het deurprofiel, de ringmoer of de krukplaat steken.
- Om het beveiligingsniveau te verhogen, wordt het gebruik van een veiligheidsplaat aanbevolen.
- Het is raadzaam de sleutel er niet van binnenuit in te laten zitten, omdat anders in geval van nood de sleutel niet aan de andere kant kan worden gebruikt. Als alternatief kan een dubbelfunctie- of koppelingscilinder worden gebruikt.
- Gebruik de sleutel niet om aan de deur te trekken.
- Zorg ervoor dat de cilinder vrij in het deurhuis en in het slot past.
- BSI Kitemark 3 ster - De sleutel moet altijd uit de cilinder worden verwijderd, ook van binnenuit, om de veiligheid van het product niet in gevaar te brengen.
- ISEO-cilinders worden gedurende de gehele productiecyclus onderworpen aan een nauwgezette kwaliteitscontrole in overeenstemming met de procedures van de norm EN ISO 9001.

INSTALLATIE

- Draai met behulp van de sleutel de nok zo dat deze in lijn ligt met het profiel van de cilinder (Fig. C - 4).
- Plaats de cilinder zonder te forceren (afb. C - 5).
- Zet de cilinder vast met de meegeleverde bevestigingsschroef (Fig. C - 6).

JUIST GEBRUIK

- Steek de sleutel volledig in het slot voordat u draait. Als u de sleutel voortijdig omdraait, kan de cilinder defect raken of kan de sleutel breken.
- De sleutel moet altijd uit de cilinder worden verwijderd, ook van binnenuit, om de veiligheid van het product niet in gevaar te brengen.
- Bij dubbelwerkende cilinders of cilinders met koppeling kunt u de sleutel altijd van binnenuit laten zitten, omdat dit type cilinder ook met ingestoken sleutel van buitenaf kan worden geopend.
- Gebruik voor het smeren alleen smeermiddel zoals Rivolta TRS Plus of gelijkwaardig en breng een druppel smeermiddel aan op de spiebaan (aanbevolen om de 5000 openingen).
- De cilinder is getest en ontworpen om te werken in een temperatuurbereik van -25°C tot +80°C.

CERTIFICERINGEN

ISEO-cilinders zijn op de carrosserie of op de minimale verpakking gemarkeerd met de behaalde productcertificering en classificatie. Een overzichtstabel en waarschuwingen met betrekking tot de certificeringsschema's zijn te vinden in het productgedeelte van de website www.iseo.com. BSI Kitemark een ster en SKG-IKOB tweesterren cilinders moeten worden gebruikt in combinatie met tweesterren (SKG of Kitemark) veiligheidsdeurbeslag om de veiligheid te garanderen. Voor cilinders met drie sterren is geen specifieke beveiliging hardware vereist, maar door het product in combinatie met beveiliging hardware te installeren, wordt de aanvalsweerstand nog verder vergroot.

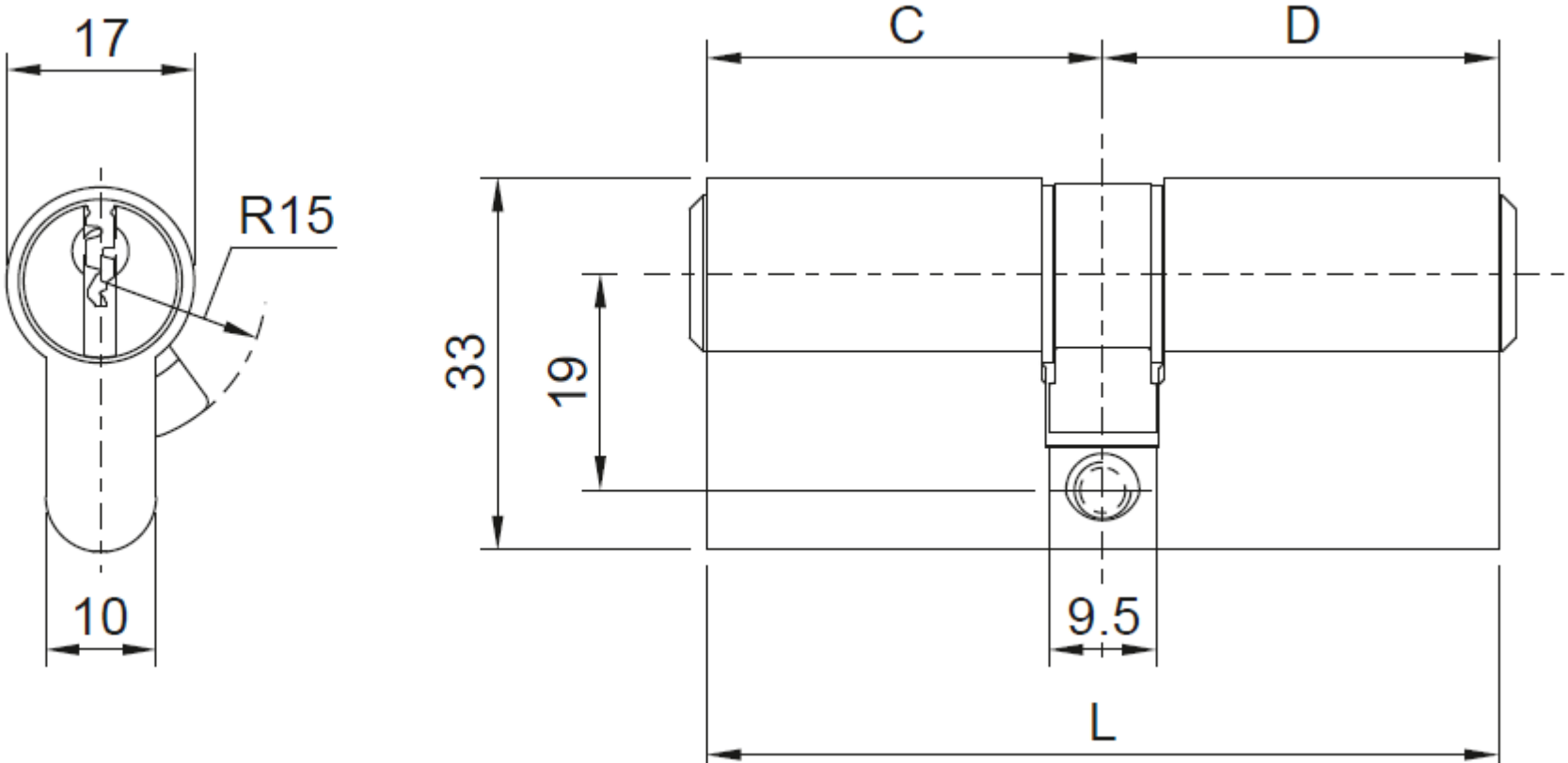
17
R15
10
C
D
33
19
9.5
L

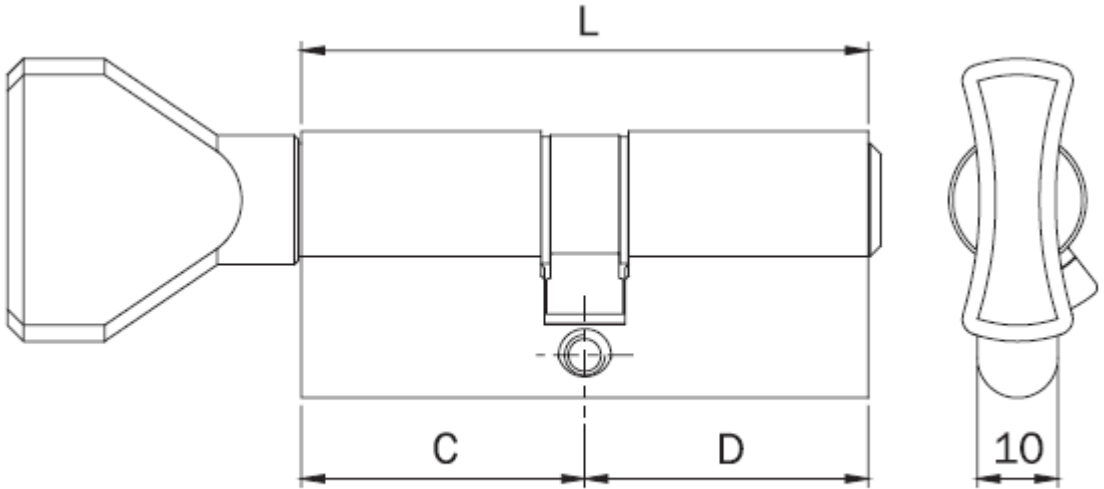
L
C
D
10

SKG-IKOB PRODUCTCERTIFICATE 428.312.06

Date of issue: 30-08-2017

Certificate holder
Iseo Serrature SpA
Via San Girolamo 13
I-25055 Pisogne
T: +39 0364 8821
E: iseo@iseo.com
I: www.iseo.com

CERTIFICATE

Declaration of SKG-IKOB
This certificate has been issued on the basis of BRL 3104 in accordance with the SKG-IKOB Regulations for Attestation, Certification and Inspection.

SKG-IKOB declares that the by or on behalf of the certificate owner produced building hardware product:

euro profile cylinder with non lockable knob

delivered under logo / brand:

ISEO / sapa

delivered under type- and / or article number:

F6 Extra / F99 - SKG knob

meets class 2 STER according BRL 3104 and NEN 5089: 2009 if the product is indelibly marked with the SKG mark, as shown above.

For SKG-IKOB

ir. H.A.J. van Dartel
Certification manager

Verify at www.sterrenwijzer.nl if this certificate is still valid and actual.
This certificate contains 2 pages.

SKG-IKOB Certificatie
Poppenbouwing 56
4191 NZ Geldermalsen

Postbus 202
4190 CE Geldermalsen

T 088-2440100
info@skgikob.nl
www.skgikob.nl

1. PRODUCT
euro profile cylinder with non lockable knob

PRODUCT TYPE
cylinder

2. TECHNICAL SPECIFICATION

Operating:	Mechanical operation
Construction:	double, with knob
System:	vertical key profile; 1 row of 6 mechanical operated detainers w/wo 2 tot 5 side detainers
Material:	cylinder body: brass with various coatings
Dimension:	17 mm profile from 30 mm in various extensions per 5 mm
Fixing:	1 steel bolt M5, length ≥ backset + 10 mm
Intended use:	in combination with cylinder mortice locks and security furniture Pay Attention! This cylinder achieves only the SKG-star rating if a door element (including side window), wherein at least P4A glass has been applied, OR in a door element (including side window) with a section filling without a view on the knob. A wooden door element (including side window) with a view to the "standard" turning knob, should be provided with a SKG (V) certified anti-drill / manipulation device.

3. DELIVERY
The delivery includes an installation instruction:
KW13390

4. PERFORMANCES
A euro profile cylinder with non lockable knob according this certificate fulfils the relevant requirements of BRL 3104.
A window- or door set, in which this euro profile cylinder, with non lockable knob is installed according the installation instructions of the certificate holder meets at least burglar resistance class (RC) 2 of NEN 5096 and EN 1627, if:

- the façade element or the (profile-)system from which the element is manufactured is delivered under a (KOMO-)quality approval with respect to the aspect burglar resistance, in which the actual window or door type is admitted and the herein mentioned conditions are fulfilled.

A window or door, in existing buildings, in which this euro profile cylinder, with non lockable knob is installed according the installation instructions of the certificate holder, meets the requirements of the Police Mark Save Housing (PKVW) - Existing Building, if:

- the other aspects of the façade element also comply with the applicable PKVW Protection directive (publication CCV).

V 3025

TREZOR TEST s.r.o.
Na Vršku 67, 250 67 Klecany, Česká republika

CERTIFICATION BODY NO. 3025
ACCREDITED BY
THE CZECH ACCREDITATION INSTITUTE

CERTIFICATE OF CONFORMITY

Registration number: TT – 32/2024
for
Iseo Deutchland GmbH
Wiesestrasse 190, D-07548 Gera, Germany

PRODUCT: Security Cylinders forlocks type F6 Extra
producer ISEO Serrature S.p.A.
Via San Girolamo 13, 25055 Pisogne (BS), Italy
CZ-CPA 25.72.12

CLASSIFICATION: The product is in accordance with the certification schema CS TT 1a/2020
(based on schema 1a of EN ISO/IEC 17067:2013, based on testing)

in accordance with the requirements for the

locking system type 2

resistance to the non-destructive method of "BUMPING" has not been evaluated
according to Annex no. 1 chap. 2.2 to the Decree no. 528/2005 Col.
intended usage for shutters in Resistance class RC 3 according to EN 1627:2021

The certificate is issued on the basis of Certification report No. C 151/2023
within the accreditation according to the Certificate No. 77/2022 of 14th February 2022
issued by the Czech Accreditation Institute.

Chairman of the Certification board
Certification Body No. 3025
Ing. Ladislav POLÁK

Deputy chairman of the Certification board
Certification Body No. 3025
Ing. Daniela ČÍŽKOVÁ

AKREDITOVANÝ CERTIFIKAČNÍ ORGÁN podle ČSN EN ISO/IEC 17065 SPOLEČNOSTI TREZOR TEST s.r.o. č. 3025

Date of publication: 25. 01. 2024
Certification date: 25. 01. 2024
Certification expiration date: 25. 01. 2027

This certificate can be used and duplicated only unchanged and with all enclosures.

Sieć Badawcza Łukasiewicz
WARSZAWSKI INSTYTUT TECHNOLOGICZNY
Dział Certyfikacji
ul. Duchnicka 3, 01-796 Warszawa

e-mail: certyfikacja.duchnicka@wit.lukasiewicz.gov.pl
www.wit.lukasiewicz.gov.pl

Łukasiewicz Warszawski Instytut Technologiczny

PCA Polskie Centrum Akredytacji — Certyfikacja Wyrobów
AC 041

CERTYFIKAT ZGODNOŚCI
Nr P41/195/2024 (9071)

Nazwa i adres posiadacza certyfikatu:
ISEO SERRATURE S.p.A.
Via San Girolamo 13, I-25055 Pisogne (BS) ITALY

Nazwa i adres producenta:
ISEO SERRATURE S.p.A.
Via San Girolamo 13, I-25055 Pisogne (BS) ITALY

Nazwa wyrobu:
Wkładka bębenkowa profilowa

Typ (odmiany):
Seria F6 Extra

Podstawowe parametry:

Klasa odporności na włamanie: - C - wg KT/402/IMP/2014, lipiec 2014r., wyd. 4;

Wyrób spełnia wymagania zawarte w:
KT/402/IMP/2014, lipiec 2014r., wyd. 4

Data ważności certyfikatu: **17 grudnia 2027 roku**

Niniejszy certyfikat jest ważny w okresie **od 18 grudnia 2024r. do 17 grudnia 2027r.** pod warunkiem, że ważna jest specyfikacja techniczna, wyrób spełnia jej wymagania oraz nie uległy istotnym zmianiom: typ wyrobu, system, warunki i miejsce produkcji.
Certyfikacja zgodności wyrobów Typ „3" wg PN-EN ISO/IEC 17067: 2014-01
Dobrowolny certyfikat zgodności wystawiony w ramach programu PC-03
Numer identyfikacyjny procesu: 096/W/2024

KIEROWNIK DZIAŁU CERTYFIKACJI
mgr inż. Marek ZIĘTALA

Z-CA DYREKTORA ds. BADAWCZYCH
dr hab. inż. Ireneusz BAIC

Certyfikat może być publikowany bez komentarzy, skrótów i zmian.
Warszawa, dnia 18 grudnia 2024r.

ENVIRONMENTAL PRODUCT DECLARATION

as per *ISO 14025* and *EN 15804+A2*

Owner of the Declaration	ARGE – The European Federation of Locks and Building Hardware Manufacturers
Publisher	Institut Bauen und Umwelt e.V. (IBU)
Programme holder	Institut Bauen und Umwelt e.V. (IBU)
Declaration number	EPD-ARG-20230545-IBG1-EN
Issue date	02.04.2024
Valid to	01.04.2029

Lock cylinders

ARGE – The European Federation of Locks and Building Hardware Manufacturers

This EPD is valid only for products supplied by an ARGE EPD licence holder.

www.ibu-epd.com | https://epd-online.com



ISEO Serrature S.p.a. (ww.iseo.com) provides this EPD under the licence of Associazione nazionale fabbricanti serrature, ferramenta e maniglie - Assoferma

1. General Information

ARGE – The European Federation of Locks and Building Hardware Manufacturers

Programme holder

IBU – Institut Bauen und Umwelt e.V.
Hegelplatz 1
10117 Berlin
Germany

Declaration number

EPD-ARG-20230545-IBG1-EN

This declaration is based on the product category rules:

Building Hardware products, 01.08.2021
(PCR checked and approved by the SVR)

Issue date

02.04.2024

Valid to

01.04.2029

Dipl.-Ing. Hans Peters
(Chairman of Institut Bauen und Umwelt e.V.)

Florian Pronold
(Managing Director Institut Bauen und Umwelt e.V.)

Lock cylinders

Owner of the declaration

ARGE – The European Federation of Locks and Building Hardware Manufacturers
Offerstraße 12
42551 Velbert
Germany

Declared product / declared unit

1 kg of lock cylinder

Scope:

This ARGE EPD covers cylinders which are used to operate locks by means of a key. The reference product used to calculate the impact this product group has on the environment is a lock cylinder composed primarily of brass, Zamak and steel, and has been selected for the LCA (Life Cycle Assessment) because it is the product with the highest impact for 1 kg of product. A validity scope analysis has also been carried out to determine the limiting factors for lock cylinders covered by this EPD. In a preliminary study (simplified LCA), it has been confirmed that this EPD represents the worst-case condition and it can therefore be used to cover all lock cylinders manufactured in Europe by ARGE member companies. The owner of the declaration shall be liable for the underlying information and evidence; the IBU shall not be liable with respect to manufacturer information, life cycle assessment data and evidences.

The EPD was created according to the specifications of EN 15804+A2. In the following, the standard will be simplified as *EN 15804*.

Verification

The standard EN 15804 serves as the core PCR			
Independent verification of the declaration and data according to ISO 14025:2011			
☐	internally	☒	externally

Dr. Matthew Fishwick,
(Independent verifier)

2. Product

2.1 Product description/Product definition

This EPD covers cylinders used to operate, by means of a key, the bolt throwing mechanism in a lock. It covers lock cylinders with varying material compositions and security grades.
For the application and use the respective national provisions at the place of use apply.

2.2 Application

These products are designed to be mounted in lock assemblies consisting of various materials intended for use on interior or exterior doors.

2.3 Technical Data

Products should comply with a suitable technical specification. *EN 1303:2015, Building Hardware Cylinders for locks – Requirements and test methods* is an example of such a specification and most products will comply with it. The relevant grading structure is shown in the following table:

Name	Value	Unit
Category of use	1	Grade
Durability	4 - 6	Grade
Door mass	0	Grade
Suitability for use in fire resisting and/or smoke control doors	0, A, B	Grade
Safety	0	Grade
Corrosion resistance and temperature	0, A, B	Grade
Key related security	1 - 6	Grade
Attack resistance	0, A, B, D	Grade

Performance data of the product with respect to its characteristics in accordance with the relevant technical provision (no CE-marking).

2.4 Delivery status

The products are sold by unit. Deliveries of individual items are possible but are an exception. Standard deliveries comprise a larger quantity of lock cylinders, as they are marketed as "B2B" products and not to end-users.

2.5 Base materials/Ancillary materials

Composition of products analysed for this EPD:

The values are given for the product analysed for this EPD. Ranges of values for other products covered by the validity scope analysis are shown in brackets.

Name	Value	Unit
Brass (24.88% – 92.61%)	67.62	%
Zamak (0.00% – 39.98%)	19.71	%
Steel (4.15% – 41.48%)	10.34	%
Sinter iron (0.00% – 2.81%)	2.25	%
Nickel (0.00% – 0.75%)	0	%
Nickel silver (0.00% – 11.19%)	0	%
Bronze (0.00% – 0.75%)	0	%
Stainless steel (0.00% – 11.44%)	0	%
Nylon 6 (0.00% – 5.15%)	0	%

Brass is an alloy of zinc and copper. Components made of brass are made by extrusion, forging, die-casting or other types of mechanical processing.

Zamak is an alloy with a base metal of zinc and alloying elements of aluminium, magnesium, and copper. Components made of Zamak are die-cast.

Steel is produced by combining iron with carbon as well as other elements depending on the desired characteristics. Components made of steel are formed by stamping or other types of mechanical processing.

Sintered iron is produced by a process in which powdered metal is pressed into a specific shape and then heated to bond the metal particles in the designed shape of the component.

Nickel is a hard and ductile transition metal. Components can be nickel-coated for decorative reasons and for providing corrosion and wear resistance.

Nickel silver is an alloy of copper, nickel, and zinc. Components made of nickel silver are formed by stamping or other types of mechanical processing.

Bronze is an alloy consisting primarily of copper, commonly with tin and often with the addition of other metals and sometimes non-metals. Components can be bronze-coated for decorative reasons and for providing sliding and dry running properties.

Stainless steel is produced by combining iron with chromium as well as other elements depending on the desired characteristics. Components made of steel are formed by stamping or other types of mechanical processing.

Nylon 6 is a polymer, in particular polyamide. It is formed by the ring-opening polymerisation of caprolactam. Components made of Nylon 6 are formed by injection moulding or other thermal forming processes.

1) This product/article/at least one partial article contains substances listed in the *ECHA candidate list* (date: 14.06.2023) exceeding 0.1 percentage by mass: Certain components may contain small amounts of lead (CAS no. 7439-92-1) as an alloying element.

2) This product/article/at least one partial article contains other cancerogenic, mutagenic, reprotoxic (CMR) substances in categories 1A or 1B which are not on the *ECHA candidate list*, exceeding 0.1 percentage by mass: no.

3) Biocide products were added to this construction product or it has been treated with biocide products (this then concerns a treated product as defined by the (EU) *Ordinance on Biocide Products No. 528/2012*): no.

2.6 Manufacture

The manufacture of a lock cylinder usually follows a 3-step process:

1. Manufacture of the components: this step may include surface treatment in the factory or by external contractors.
2. Pre-assembly of modules (in the factory).
3. Final assembly (in the factory).

2.7 Environment and health during manufacturing

Regular measurements of air quality and noise levels are carried out by the manufacturers, the ARGE member companies. The results shall be within the mandatory safety levels. In areas where employees are exposed to chemical products, the required protective clothing and technical protective devices shall be provided. Regular health checks are mandatory for employees in production facilities.

2.8 Product processing/Installation

The installation of the product may vary depending on the type of lock assembly and the specific situation, but the products shall not require energy consumption for installation.

2.9 Packaging

Normally, each individual product is packed in paper or cardboard. These individual products are then packed in a cardboard box and stacked on wooden pallets for transport to the customer.

Waste from product packaging is collected separately for waste disposal (including recycling).

2.10 Condition of use

Once installed, the products shall require no servicing during their expected service lives. There shall be no consumption of water or energy linked to their use, and they shall not cause any emissions.

2.11 Environment and health during use

No environmental damage or health risks are to be expected during normal conditions of use.

2.12 Reference service life

The reference service life is 30 years under normal working conditions. This corresponds to passing a mechanical endurance test of 100.000 cycles as specified in the *EN 1303*. The reference service life is dependent on the actual frequency of use and environmental conditions. It is required that installation, as well as maintenance of the product, must be done in line with instructions provided by the manufacturer.

2.13 Extraordinary effects

Fire

The product is suitable for use in a fire resisting and/or smoke control door set according to the classes specified in *EN 1303*, unless it is classified in class/grade 0.

Water

The declared product is intended to be used in buildings under normal conditions (indoor or outdoor). It shall not emit hazardous substances in the event of flooding.

Mechanical destruction

Mechanical destruction of the declared product shall not materially alter its composition, or have any adverse effect on the environment.

2.14 Re-use phase

Removal of the cylinder (for recycling or re-use) shall have no adverse effect on the environment.

2.15 Disposal

Lock cylinders should be recycled wherever possible, providing that there is no adverse effect on the environment. The waste code in accordance with the *European Waste Code* is 17 04 07.

2.16 Further information

Details of all types and variants can be found on the manufacturers' websites. The respective website addresses are available at https://arge.org.

3. LCA: Calculation rules

3.1 Declared Unit

The declared unit for all products covered by ARGE EPD is 1 kg (of product). Since individual products will rarely weigh exactly 1 kg it is necessary to establish the exact weight of the product and then use this as a correction factor to determine the true values for 1 kg of product in the tables (Section 5).

Declared unit

Name	Value	Unit
Declared unit	1	kg
Mass of declared product	0.294	kg
Raw density	1	kg/m^3

3.2 System boundary

Type of the EPD: "cradle to gate with options, with modules C1 – C4, and module D (A1-A3, C1-C3, D and additional modules)"

The analysis of the product life cycle includes the production and transport of the raw materials, the manufacture of the product and the packaging materials which are declared in modules A1-A3.
Losses during production are considered as waste and are sent for recycling. No recycling processes are taken into account except for transport and electricity consumption for grinding the metals. When recycled metals are used as raw material only their transformation process is taken into account and not the extraction of the raw material.
A4 module represents the transport of the finished lock cylinder to the installation site.
There is no waste associated with the installation of the product. The A5 module therefore represents only the disposal of the product packaging.

The End-of-Life (EoL) stages are also considered. The transportation to the EoL disposal site is taken into account in module C2. Module C4 covers the disposal of the locks. Module C3 covers the recycling of the individual elements according to European averages, with the remaining waste divided between incineration and landfill. Such a mixed scenario is declared due to the complex material mix of the product and the dependency of the EoL-route on the EoL-route of the product the lock cylinder has been integrated into.
In practice, the end of life has been modelled as follows:

- when a material is sent for recycling, generic transport and electric consumption of a shredder is taken into account (corresponding to the process 'Grinding, metals'). Only then, is the material considered to have attained the 'end-of-waste' state.
- each type of waste is modelled as a transport to the treatment site with a distance of 30 km. Parts sent for recycling include electricity consumption (grinding) and a flow ('Materials for recycling, unspecified').

3.3 Estimates and assumptions

The LCA data of the declared lock cylinder have been calculated from the production data of in total 4 ARGE member companies, representing 8 different products. These companies had been chosen by ARGE as being representative by means of their production processes and their market shares. The product chosen as representative for this calculation follows the "worst-case" principle as explained in section 6. LCA interpretation.

3.4 Cut-off criteria

The cut-off criteria considered are 1% of renewable and non-renewable primary energy usage and 1% of the total mass of that unit process. The total neglected input flows per module shall be a maximum of 5% of energy usage and mass.

For this study, all input and output flows have been considered at 100%, including raw materials as per the product composition provided by the manufacturer and packaging of raw materials as well as the final product. Energy and water consumptions have also been considered at 100% according to the data provided.

With the approach chosen, no significant environmental impacts are known to have been cut off.

3.5 Background data

For the life cycle modelling of the considered product, all relevant background datasets are taken from *ecoinvent v3.8* (system model: cut-off by classification).

3.6 Data quality

The objective of this evaluation is to evaluate the environmental impacts generated by the products throughout their entire life cycles. To this end, *ISO 14040, ISO 14044* and *EN 15804* have been met regarding the quality of data on the following different criteria:

Time: The life cycle inventory data used come from:

- Data collected specifically for this study on the ARGE member companies' manufacturing sites. Datasets are based on 1-year averaged data (time period: January 2013 to December 2013 considered representative for 2022).
- In the absence of collected data, generic data from the *ecoinvent v3.8* database have been used. This is updated regularly and is representative of current processes (the entire database having been updated in 2021).

Geography: Data come from production sites of the ARGE member companies. Generic data come from the *ecoinvent* database, representative for European production processes.

Technology: Material shaping technologies are based on European technology in the case of the use of generic data.

A total of 8 typical products (based on sales figures) have been evaluated, and the worst-case results are used in the tables.

3.7 Period under review

The data of the LCA is based on the annual production data of an ARGE member from 2013, considered representative for the year 2022.

3.8 Geographic Representativeness

Land or region, in which the declared product system is manufactured, used or handled at the end of the product´s lifespan: Europe

3.9 Allocation

The products are produced in numerous production sites. All data were provided by the manufacturers of the products per unit and then divided by the mass of the product to give a value per kg of product produced.

The assumptions relating to the EoL of the product are described in the section System Boundaries.

Metal losses during production (stage A3) are considered as waste.

3.10 Comparability

Basically, a comparison or an evaluation of EPD data is only possible if all the data sets to be compared were created according to *EN 15804* and the building context, respectively the product-specific characteristics of performance, are taken into account.

ecoinvent v3.8 (system model: cut-off by classification) has been used as the background database.

4. LCA: Scenarios and additional technical information

Characteristic product properties of biogenic carbon

Information on the biogenic carbon content at factory gate

Note: 1 kg of biogenic carbon is equivalent to 44/12 kg of CO_2.

Name	Value	Unit
Biogenic carbon content in product	0	kg C
Biogenic carbon content in accompanying packaging	0.0595	kg C

The following information is the basis of the declared modules within the LCA in this EPD.

Transport to the building site (A4)

Name	Value	Unit
Litres of fuel	25.8	l/100km
Transport distance	3500	km
Capacity utilisation (including empty runs)	36	%

Installation into the building (A5)

Name	Value	Unit
Material loss	0.137	kg

The scope of this study does not cover the installation of the product, which varies depending on the type of door and the specific situation. The disposal of the product packaging has been taken into account.

End of life packaging is a mix between recycling, landfill and incineration according to French ADEME statistics.

No re-use of packaging is considered in this study.

Reference service life

Name	Value	Unit
Reference service life	30	a
Test cycles over RSL (EN 1303)	100'000	cycles

End of life (C1-C4)

Name	Value	Unit
Collected separately waste type	1	kg
Recycling	0.458	kg
Energy recovery	0.249	kg
Landfilling	0.293	kg

It is assumed that a 16–32-ton truck is used to transport the product:
- Transport to shredding facility for metal recovery: 150 km
- Transport to municipal waste incineration plant: 50 km
- Transport to landfill: 30 km

Reuse, recovery and/or recycling potentials (D), relevant

scenario information

Module D contains the benefits and loads beyond the system boundary related to the recycling of metals, which result from the treatment of recycled materials from the point of end-of-waste status to the point of substitution (as costs) and the substitution of primary resources (as benefits).

According to *EN 16710*, clause 6.4.3.3: 'In module D substitution effects are calculated only for the resulting net output flow.

For building hardware, the following rules apply for the quantification of net output flows:
- all production scrap and cuttings leave modules A1-B3 as sorted scrap without allocated burdens from primary production; the corresponding amounts are declared as material for recycling (MFR);
- net amounts of a metal leaving the product system are quantified as the material for recycling leaving modules A1-C4 minus the input of secondary scrap (secondary material, SM) to the product system;
- in the case of brass and zinc alloys, which are composed of two different constituting metals, no difference shall be made between the input of secondary constituting metals (Cu and Zn; Cu and Sn) and its alloys (CuZn; CuSn).

Negative net output flows have not been considered in the quantification of module D.

It also includes the benefits and loads related to 'exported energy electricity' and 'exported energy heat' resulting from the energy recovery from plastic wastes in a municipal waste incineration plant as modelled in Modules A3, A5 and C4.

5. LCA: Results

In Table 1 "Description of the system boundary", the declared modules are indicated with an "X"; all modules that are not declared within the EPD but where additional data are available are indicated with "MND". Those data can also be used for building assessment scenarios. The values are declared with three valid digits in exponential form.
The set of characterisation factors EF3.0 has been used for the life cycle assessment.

DESCRIPTION OF THE SYSTEM BOUNDARY (X = INCLUDED IN LCA; MND = MODULE OR INDICATOR NOT DECLARED; MNR = MODULE NOT RELEVANT)

Product stage			Construction process stage		Use stage							End of life stage				Benefits and loads beyond the system boundaries
Raw material supply	Transport	Manufacturing	Transport from the gate to the site	Assembly	Use	Maintenance	Repair	Replacement	Refurbishment	Operational energy use	Operational water use	De-construction demolition	Transport	Waste processing	Disposal	Reuse-Recovery-Recycling-potential
A1	**A2**	**A3**	**A4**	**A5**	**B1**	**B2**	**B3**	**B4**	**B5**	**B6**	**B7**	**C1**	**C2**	**C3**	**C4**	**D**
X	X	X	X	X	MND	MND	MNR	MNR	MNR	MND	MND	X	X	X	X	X

RESULTS OF THE LCA - ENVIRONMENTAL IMPACT according to EN 15804+A2: 1 kg of lock cylinder

Parameter	Unit	A1-A3	A4	A5	C1	C2	C3	C4	D
GWP-total	kg CO_2 eq	1.09E+01	6.52E-01	2.22E-01	0	1.5E-02	3.12E-03	4.64E-03	-5.25E+00
GWP-fossil	kg CO_2 eq	1.11E+01	6.51E-01	3.36E-03	0	1.5E-02	3.11E-03	4.63E-03	-5.24E+00
GWP-biogenic	kg CO_2 eq	-2.18E-01	0	2.18E-01	0	0	0	0	0
GWP-luluc	kg CO_2 eq	2.34E-02	2.61E-04	1.23E-06	0	5.98E-06	7.76E-06	3.8E-06	-1.19E-02
ODP	kg CFC11 eq	7.53E-07	1.51E-07	6.88E-10	0	3.47E-09	1.58E-10	1.33E-09	-2.84E-07
AP	mol H^+ eq	5.91E-01	1.85E-03	1.48E-05	0	4.25E-05	1.6E-05	3.35E-05	-3.37E-01
EP-freshwater	kg P eq	2.7E-03	4.65E-06	2.85E-08	0	1.07E-07	3.49E-07	6.67E-08	-1.51E-03
EP-marine	kg N eq	3.25E-02	3.68E-04	4.93E-06	0	8.44E-06	2.05E-06	1.11E-05	-1.69E-02
EP-terrestrial	mol N eq	4.44E-01	4.1E-03	5.32E-05	0	9.41E-05	2.37E-05	1.23E-04	-2.41E-01
POCP	kg NMVOC eq	1.22E-01	1.58E-03	1.55E-05	0	3.62E-05	6.49E-06	3.75E-05	-6.67E-02
ADPE	kg Sb eq	1.46E-02	2.31E-06	1.12E-08	0	5.3E-08	7.54E-09	1.46E-08	-8.45E-03
ADPF	MJ	1.39E+02	9.88E+00	4.67E-02	0	2.27E-01	6.59E-02	9.95E-02	-6.39E+01
WDP	m^3 world eq deprived	1.09E+01	3.01E-02	2.34E-04	0	6.9E-04	7.36E-04	-5.9E-04	-5.94E+00

GWP = Global warming potential; ODP = Depletion potential of the stratospheric ozone layer; AP = Acidification potential of land and water; EP = Eutrophication potential; POCP = Formation potential of tropospheric ozone photochemical oxidants; ADPE = Abiotic depletion potential for non-fossil resources; ADPF = Abiotic depletion potential for fossil resources; WDP = Water (user) deprivation potential)

RESULTS OF THE LCA - INDICATORS TO DESCRIBE RESOURCE USE according to EN 15804+A2: 1 kg of lock cylinder

Parameter	Unit	A1-A3	A4	A5	C1	C2	C3	C4	D
PERE	MJ	3E+01	1.39E-01	-7.08E-01	0	3.19E-03	1.25E-02	1.41E-03	-1.56E+01
PERM	MJ	1.79E+00	0	-2.19E-01	0	0	0	0	0
PERT	MJ	3.18E+01	1.39E-01	-9.28E-01	0	3.19E-03	1.25E-02	1.41E-03	-1.56E+01
PENRE	MJ	1.4E+02	9.88E+00	4.67E-02	0	2.27E-01	6.65E-02	9.95E-02	-6.41E+01
PENRM	MJ	0	0	0	0	0	0	0	0
PENRT	MJ	1.4E+02	9.88E+00	4.67E-02	0	2.27E-01	6.65E-02	9.95E-02	-6.41E+01
SM	kg	2.79E-01	0	0	0	0	0	0	0
RSF	MJ	0	0	0	0	0	0	0	0
NRSF	MJ	0	0	0	0	0	0	0	0
FW	m^3	2.07E-01	1.05E-03	3.85E-05	0	2.41E-05	4.25E-05	2.16E-04	-1.07E-01

PERE = Use of renewable primary energy excluding renewable primary energy resources used as raw materials; PERM = Use of renewable primary energy resources used as raw materials; PERT = Total use of renewable primary energy resources; PENRE = Use of non-renewable primary energy excluding non-renewable primary energy resources used as raw materials; PENRM = Use of non-renewable primary energy resources used as raw materials; PENRT = Total use of non-renewable primary energy resources; SM = Use of secondary material; RSF = Use of renewable secondary fuels; NRSF = Use of non-renewable secondary fuels; FW = Use of net fresh water

RESULTS OF THE LCA – WASTE CATEGORIES AND OUTPUT FLOWS according to EN 15804+A2: 1 kg of lock cylinder

Parameter	Unit	A1-A3	A4	A5	C1	C2	C3	C4	D
HWD	kg	4.07E-03	2.58E-05	1.97E-07	0	5.92E-07	2.34E-08	1.88E-07	-2.34E-03
NHWD	kg	5.44E+00	5.2E-01	2.91E-03	0	1.19E-02	2.48E-04	4.15E-01	-2.4E+00
RWD	kg	9.68E-04	1.43E-04	6.28E-07	0	3.28E-06	8.86E-07	1.28E-06	-3.76E-04
CRU	kg	0	0	0	0	0	0	0	0
MFR	kg	7.94E-01	0	9.86E-02	0	0	4.66E-01	0	0
MER	kg	0	0	0	0	0	0	0	0

EEE	MJ	0	0	2.47E-02	0	0	0	0	0
EET	MJ	0	0	1.64E-01	0	0	0	0	0

HWD = Hazardous waste disposed; NHWD = Non-hazardous waste disposed; RWD = Radioactive waste disposed; CRU = Components for re-use; MFR = Materials for recycling; MER = Materials for energy recovery; EEE = Exported electrical energy; EET = Exported thermal energy

RESULTS OF THE LCA – additional impact categories according to EN 15804+A2-optional: 1 kg of lock cylinder

Parameter	Unit	A1-A3	A4	A5	C1	C2	C3	C4	D
PM	Disease incidence	1.49E-06	5.23E-08	2.96E-10	0	1.2E-09	4.28E-11	1.01E-09	-7.86E-07
IR	kBq U235 eq	6.46E-01	4.29E-02	1.91E-04	0	9.84E-04	6E-04	3.83E-04	-2.9E-01
ETP-fw	CTUe	4.87E+03	7.75E+00	4.18E-02	0	1.78E-01	3.32E-02	5.09E-01	-2.79E+03
HTP-c	CTUh	1.16E-07	2.49E-10	2.71E-12	0	5.72E-12	8.86E-13	7.29E-12	-6.48E-08
HTP-nc	CTUh	7.92E-06	7.83E-09	1.11E-10	0	1.8E-10	2.88E-11	8.44E-11	-4.55E-06
SQP	SQP	2.35E+02	6.88E+00	3.07E-02	0	1.58E-01	1.01E-02	1.7E-01	-1.12E+02

PM = Potential incidence of disease due to PM emissions; IR = Potential Human exposure efficiency relative to U235; ETP-fw = Potential comparative Toxic Unit for ecosystems; HTP-c = Potential comparative Toxic Unit for humans (cancerogenic); HTP-nc = Potential comparative Toxic Unit for humans (not cancerogenic); SQP = Potential soil quality index

Disclaimer 1 –
for the indicator 'Potential Human exposure efficiency relative to U235'. This impact category deals mainly with the eventual impact of low-dose ionizing radiation on human health of the nuclear fuel cycle. It does not consider effects due to possible nuclear accidents, occupational exposure or radioactive waste disposal in underground facilities. Potential ionizing radiation from the soil, radon and from some construction materials is also not measured by this indicator.

Disclaimer 2 –
for the indicators 'abiotic depletion potential for non-fossil resources', 'abiotic depletion potential for fossil resources', 'water (user) deprivation potential, deprivation-weighted water consumption', 'potential comparative toxic unit for ecosystems', 'potential comparative toxic unit for humans – cancerogenic', 'Potential comparative toxic unit for humans - not cancerogenic', 'potential soil quality index'. The results of this environmental impact indicator shall be used with care as the uncertainties on these results are high as there is limited experience with the indicator.

6. LCA: Interpretation

Figure 1 illustrates the relative contributions of the different modules along the life cycle of the declared products.

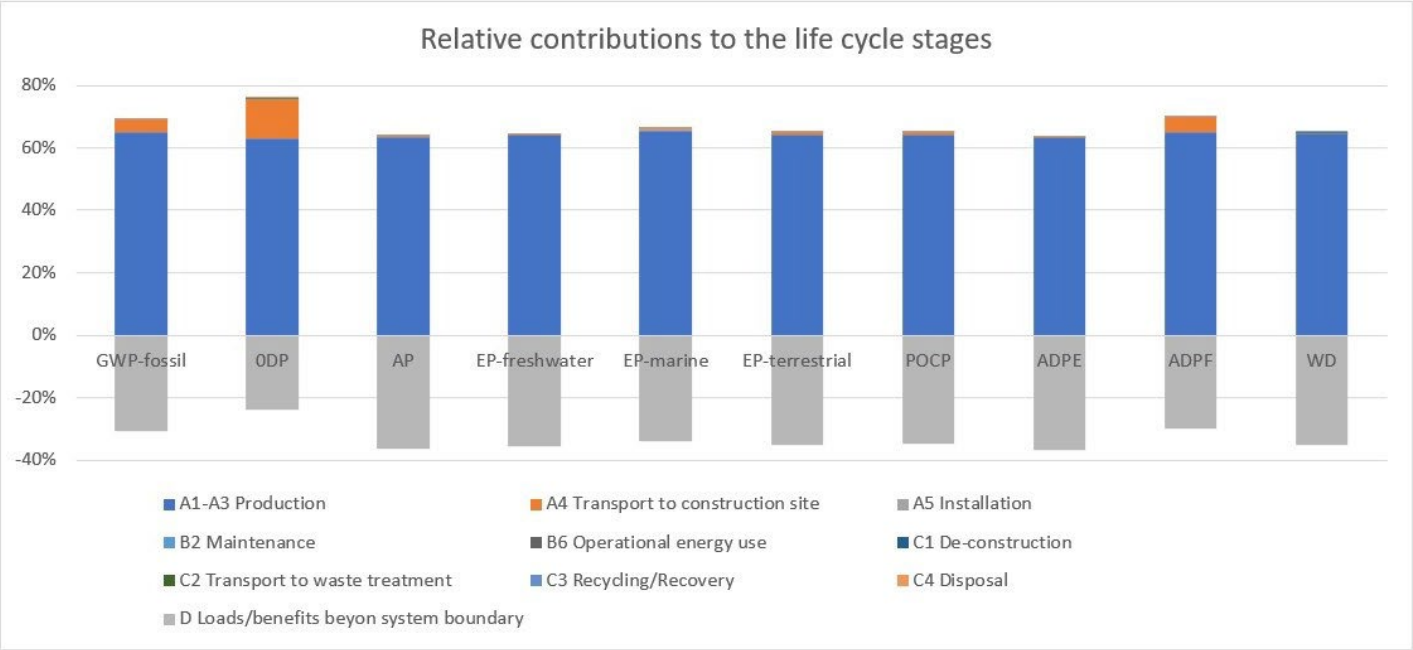

Figure 1: Environmental impacts of lock cyclinders along its life cycle

The largest part of environmental impacts is caused during production (modules A1-A3); comparably small impacts are caused during the transport of the product to the construction site (via the manufacturer of the product, which the lock cylinder has been integrated into).

All the other modules related to the product life cycle are not significant.

Benefits and burdens beyond the system boundary (module D) are in the order of 25 % to 35 % of the impacts over the product life cycle (modules A1-A3) and relate basically to the recycling of metals.

A total of 8 typical products (based on sales figures) have been evaluated and the worst-case results are used in section 5 of this EPD. In chapter 2.5, the tabulated range of relative weight per material ensures that the variability of results stays within

+/- 40% of the declared values (assessed for the indicators GWP, PENRT, and non-hazardous waste).

7. Requisite evidence

No testing results are required by the PCR part B.

8. References

Product category rules of IBU

IBU (2021)
IBU (2021): General Instructions for the EPD Programme of the Institut Bauen und Umwelt e.V. (General Instructions for the IBU EPD Programme). Version 2.0, Institut Bauen und Umwelt, Berlin.

IBU (2021)
IBU (2021) PCR Part A: Calculation rules for the life cycle assessment and requirements on the project report according to EN 15804+A2. Version 1.3., Institut Bauen und Umwelt, Berlin.

IBU (2023)
IBU (2023): PCR Part B: Requirements on the EPD for building hardware products, Institut Bauen und Umwelt, Berlin.

Standards and legal documents

EN 15804
EN 15804:2012+A2:2019+AC:2021, Sustainability of construction works - Environmental product declarations - Core rules for the product category of construction products.

EN 17610
EN 17610:2022, Building hardware - Environmental product declarations - Product category rules complementary to EN 15804 for building hardware.

ISO 14025
ISO 14025:2006-07, Environmental labels and declarations - Type III Environmental declarations - Principles and procedures.

ISO 14044
EN ISO 14044:2006-07, Environmental management - Life cycle assessment - Requirements and guidance (ISO 14044:2006).

EN 1303
DIN EN 1303:2015, Building hardware - Cylinders for locks - Requirements and test methods.

EN 13501-1
EN 13501-1:2018, Fire classification of construction products and building elements - Part 1: Classification using data from reaction to fire tests.

ISO 15686
ISO 15686:1, -2, -7 and -8. Service life planning (various parts).

ECHA candidate list
Candidate List of substances of very high concern for Authorisation, published in accordance with Article 59(10) of the REACH Regulation. European Chemicals Agency, Brussels.

Ordinance on Biocide Products No. 528/2012
REGULATION (EU) No 528/2012 OF THE EUROPEAN PARLIAMENT AND OF THE COUNCIL of 22 May 2012 concerning the making available on the market and use of biocidal products.

European List of Waste
Commission Decision of 3 May 2000 replacing Decision 94/3/EC establishing a list of wastes pursuant to Article 1(a) of Council Directive 75/442/EEC on waste and Council Decision 94/904/EC establishing a list of hazardous waste pursuant to Article 1(4) of Council Directive 91/689/EEC on hazardous waste (notified under document number C(2000) 1147).

Additional references

BBSR 2017
BBSR (2017): Nutzungsdauer von Bauteilen in Lebenszyklusanalysen nach Bewertungssystem Nachhaltiges Bauen (BNB). Version vom 24.10.2017, Bundesinstitut für Bau-, Stadt- und Raumforschung, Berlin.

ecoinvent v3.8
http://www.ecoinvent.org

Publisher

Institut Bauen und Umwelt e.V.
Hegelplatz 1
10117 Berlin
Germany

+49 (0)30 3087748- 0
info@ibu-epd.com
www.ibu-epd.com

Programme holder

Institut Bauen und Umwelt e.V.
Hegelplatz 1
10117 Berlin
Germany

+49 (0)30 3087748- 0
info@ibu-epd.com
www.ibu-epd.com

Author of the Life Cycle Assessment

Dr. Frank Werner - Umwelt & Entwicklung
Kammelenbergstrasse 30
9011 St. Gallen
Switzerland

+ 41 (0)44 241 39 06
frank@frankwerner.ch
http://www.frankwerner.ch/

Owner of the Declaration

ARGE – The European Federation of Locks and Building Hardware Manufacturers
Offerstraße 12
42551 Velbert
Germany

+49 (0)2051 9506 15
mail@arge.org
www.arge.org

DICHIARAZIONE DI CONFORMITÀ N°30 Rev.0
"BUMP RESISTANT"

La ditta:

ISEO Serrature S.p.A.

Via S. Girolamo, 13
25055 - Pisogne - BS
Italy

dichiara sotto la propria responsabilità che i cilindri delle seguenti serie

"F6 Extra", "F6 Extra S"
"R7", "R11", "R50"
" CSR R9", "CSR R9 Plus" e "CSR R90"

sono resistenti alle tecniche di effrazione denominate

"PICKING" e "BUMPING"

Questi cilindri sono classificati "KITEMARK 1 Star", Licenza Kitemark N°544418.
Questi cilindri sono conformi alla Norma BSI BS3621:2007 ed alla Specifica Tecnica DHF TS007:2014.

La Norma BSI BS3621:2007, in aggiunta ai requisiti prevista dalla Norma Europea EN1303:2005, verifica la resistenza all'effrazione dei cilindri eseguendo una prova di attacco nella quale vengono applicate diverse tecniche per una durata complessiva di 15 minuti.
La prova viene eseguita su 3 diversi cilindri, da 3 esperti serraturieri della "Master Locksmith Association".
La prova viene ripetuta ogni 6 mesi su cilindri prelevati dall'Ente Notificato BSI nel magazzino della Iseo Serrature S.p.A.

Organismo di certificazione: ..... **BSI**
Kitemark Court, Davy Avenue,
Knowlhil, Milton Keynes Mk5 8PP

Luogo ..... Pisogne
(Place)
Prima emissione 28.05.2014
(First issue)
Emissione corrente 28.05.2014
(Corrent issue)

Nome in chiaro *(Name)*
EVARISTO FACCHINETTI
Amministratore delegato *(Managing Director)*

Firma .....

Kitemark™ Certificate

This is to certify that:

ISEO Serrature SpA
Via San Girolamo, 13
Pisogne
Brescia
25055
Italy

Holds Certificate Number: KM 544418

In respect of:

TS007-1
Enhanced security performance requirements for replacement cylinders and/or associated hardware

This issues the right and licence to use the Kitemark in accordance with the Kitemark Terms and Conditions governing the use of the Kitemark, as may be updated from time to time by BSI Assurance UK Ltd (the "Conditions"). All defined terms in this Certificate shall have the same meaning as in the Conditions.

The use of the Kitemark is authorized in respect of the Product(s) detailed on this Certificate provided at or from the above address.

For and on behalf of BSI: Shahm Barhom, Group Product Certification Director

First Issued: 2009-07-20
Latest Issue: 2024-02-07

Effective Date: 2024-02-07
Expiry Date: 2027-01-20

This certificate has been issued by and remains the property of BSI Assurance UK Ltd, Kitemark Court, Davy Avenue, Knowlhill, Milton Keynes MK5 8PP, United Kingdom and should be returned immediately upon request.
To check its validity telephone +44 (0) 345 080 9000. An electronic certificate can be authenticated online.

BSI Assurance UK Limited, registered in England under number 7805321 at 389 Chiswick High Road, London W4 4AL, UK.
A member of BSI Group of Companies.

Kitemark™ Certificate

No. KM 544418

TS007-1:2014+A2:2018 - Enhanced security performance requirements for replacement cylinders and/or associated security hardware

Table 1: Product identification table of Products Covered by Certificate (to be read in conjunction with Tables 2, 2a and 3)

No	Description	Additional Information	Model	Branded
1	Cylinder	Euro profile cylinder including double key, single key option and thumbturn options	1 star rated cylinder, model: F6 Extra	• ISEO • SAPA • BS HS High Security Cylinder
2	Cylinder	Euro profile cylinder including double key, single key option and thumbturn options	1 star rated cylinder, model: F6 Extra S	• ISEO • SAPA • BS HS High Security Cylinder
3	Cylinder	Euro profile cylinder including double key, single key option and thumbturn options	1 star rated cylinder, model: R7 Extra	• ISEO
4	Cylinder	Euro profile cylinder including double key, single key option and thumbturn options	1 star rated cylinder, model: R50 Extra	• ISEO
5	Cylinder	Euro profile cylinder including double key, single key option and thumbturn options	1 star rated cylinder, model: R50 CS1	• ISEO
6	Cylinder	Euro profile cylinder including double key, single key option and thumbturn options	1 star rated cylinder, model: R11	• ISEO
7	Cylinder	Euro profile cylinder including double key, single key option and thumbturn options	1 star rated cylinder, model: R11 Progress	• ISEO
8	Cylinder	Euro profile cylinder including double key, single key option and thumbturn options	1 star rated cylinder, model: CSR R90	• ISEO
9	Cylinder	Euro profile cylinder including double key, single key option and thumbturn options	1 star rated cylinder, model: CSR R9	• ISEO

First Issued: 2009-07-20 Effective Date: 2024-02-07

Latest Issue: 2024-02-07 Expiry Date: 2027-01-20

This certificate has been issued by and remains the property of BSI Assurance UK Ltd, Kitemark Court, Davy Avenue, Knowlhill, Milton Keynes MK5 8PP, United Kingdom and should be returned immediately upon request.
To check its validity telephone +44 (0) 345 080 9000. An electronic certificate can be authenticated online.

BSI Assurance UK Limited, registered in England under number 7805321 at 389 Chiswick High Road, London W4 4AL, UK.
A member of BSI Group of Companies.

Kitemark™ Certificate

No. KM 544418

TS007-1:2014+A2:2018 - Enhanced security performance requirements for replacement cylinders and/or associated security hardware

Table 1 (continued): Product identification table of Products Covered by Certificate (to be read in conjunction with Tables 2, 2a and 3)

No	Description	Additional Information	Model	Branded
10	Cylinder	Euro profile cylinder including double key, single key option and thumbturn options	1 star rated cylinder, model: CSR R9 Plus	• ISEO
11	Cylinder	Euro profile cylinder including double key, single key option and thumbturn options	1 star rated cylinder, model: R500 SPI	• ISEO
12	Cylinder	Euro profile cylinder including double key, single key option and thumbturn options	1 star rated cylinder, model: CSF F90 SPI	• ISEO
13	Cylinder	Euro profile cylinder including double key, single key option and thumbturn options	3 star rated cylinder, model: F6 Extra S3	• ISEO • SAPA • BS HS High Security Cylinder
14	Cylinder	Euro profile cylinder including double key, single key option and thumbturn options	3 star rated cylinder, model: R700 S3	• ISEO
Note 1:		All cylinder types have met the general vulnerability requirements outlined within clause 4.2 of TS007-1.		
Note 2:		Keyed alike and Master Key versions available which should comply with the scheme requirements as detailed within the section entitled: 'additional information'.		
Note 3:		Cylinders 1 - 10 covered under the scope of this Certificate can be offered in a modular format in addition to the existing standard variant.		
Note 4:		Cylinders 11 - 12 covered under the scope of this Certificate can be offered in a compact version only.		

First Issued: 2009-07-20
Latest Issue: 2024-02-07

Effective Date: 2024-02-07
Expiry Date: 2027-01-20

This certificate has been issued by and remains the property of BSI Assurance UK Ltd, Kitemark Court, Davy Avenue, Knowlhill, Milton Keynes MK5 8PP, United Kingdom and should be returned immediately upon request.
To check its validity telephone +44 (0) 345 080 9000. An electronic certificate can be authenticated online.

BSI Assurance UK Limited, registered in England under number 7805321 at 389 Chiswick High Road, London W4 4AL, UK.
A member of BSI Group of Companies.

Kitemark™ Certificate

No. KM 544418

TS007-1:2014+A2:2018 - Enhanced security performance requirements for replacement cylinders and/or associated security hardware

Table 2: Classification Table of Products Covered by Certificate In accordance with BS EN 1303 (to be read in conjunction with Tables 1 and 3)								
Minimum classification from EN 1303 required:								**Cylinder models: 1 - 14**
1	**6**	**0**	**0**	**0**	**C**	**5**	**D***	Achieved (Note 4 & 5 applies)
Note 4:			Cylinder(s) detailed in table 1 have achieved at least the minimum requirements against EN 1303:2015 as specified in clause 4.2 of TS007-1 (*) and at least the minimum requirements for 'Attack Resistance' as also stated in clause 4.2 of TS007-1 (without the use of furniture) as indicated in this table.					
Note 5:			Cylinder models 13 and 14 have achieved 'Grade B' against annex A of EN 1303:2015, cylinders suitable for use on fire resistant / smoke control doors (4th digit)					

First Issued: 2009-07-20
Latest Issue: 2024-02-07

Effective Date: 2024-02-07
Expiry Date: 2027-01-20

This certificate has been issued by and remains the property of BSI Assurance UK Ltd, Kitemark Court, Davy Avenue, Knowlhill, Milton Keynes MK5 8PP, United Kingdom and should be returned immediately upon request.
To check its validity telephone +44 (0) 345 080 9000. An electronic certificate can be authenticated online.

BSI Assurance UK Limited, registered in England under number 7805321 at 389 Chiswick High Road, London W4 4AL, UK.
A member of BSI Group of Companies.

Kitemark™ Certificate

No. KM 544418

TS007-1:2014+A2:2018 - Enhanced security performance requirements for replacement cylinders and/or associated security hardware

Table 3: Requirements for Cylinders and/or Security Hardware in line with TS007-1 (to be read in conjunction with Tables 1, 2 and 2a)		
Requirements in BS 3621	**Cylinder models: 1 - 12**	**Cylinder model: 13 - 14**
Annex A clause A5 of BS 3621 as per clause 4.2 of TS007-1.	Achieved	Achieved
Annex A clause A6 of BS 3621 as per clause 4.2 of TS007-1.	Achieved	Achieved
Testing in accordance with PAS 24 – Security hardware and cylinder test assessment as per clause 4.4 of TS007-1.	n/a Note 6 applies	Achieved Note 7 applies
Note 6:	This cylinder(s) offers resistance to many types of attack. It is designed to be used in conjunction with 2 two-star security door hardware to ensure enhanced resistance to all commonly used attack methods. Therefore, this product **MUST** be used in conjunction with two-star security door hardware meeting TS007-1 to ensure security.	
Note 7:	This cylinder offers resistance to the commonly used types of attack. No specific security hardware is required but installing this three-star cylinder in conjunction with security hardware complying with TS007-1 will increase attack resistance still further.	

Additional Information

To satisfy the requirements for Kitemark under this scheme for a 'master key' system, this should not reduce the available combinations below the EN 1303 requirements and the stipulations detailed within BS 3621/BS 8621/ BS 10621 and are only covered as a finished product, produced at the designated factory, covered by the Kitemark Certificate. In addition, a master keyed suite should also be designed so as not to compromise any anti-manipulation arrangements.

First Issued: 2009-07-20
Latest Issue: 2024-02-07

Effective Date: 2024-02-07
Expiry Date: 2027-01-20

This certificate has been issued by and remains the property of BSI Assurance UK Ltd, Kitemark Court, Davy Avenue, Knowlhill, Milton Keynes MK5 8PP, United Kingdom and should be returned immediately upon request.
To check its validity telephone +44 (0) 345 080 9000. An electronic certificate can be authenticated online.

BSI Assurance UK Limited, registered in England under number 7805321 at 389 Chiswick High Road, London W4 4AL, UK.
A member of BSI Group of Companies.

Kitemark™ Certificate

No. KM 544418

TS007-1:2014+A2:2018 - Enhanced security performance requirements for replacement cylinders and/or associated security hardware

Further manufacturing location:

Cylinder types: F6 Extra, F6 Extra S, R11, R50 Extra, R50 CS1, R700 S3 and F6 Extra S3 including modular variants.	M Marcus Limited Unit 7 Narrowboat Way Dudley DY2 0XQ United Kingdom	Limited manufacturing activities covering pinning, repinning and master keying.

First Issued: 2009-07-20

Latest Issue: 2024-02-07

Effective Date: 2024-02-07

Expiry Date: 2027-01-20

This certificate has been issued by and remains the property of BSI Assurance UK Ltd, Kitemark Court, Davy Avenue, Knowlhill, Milton Keynes MK5 8PP, United Kingdom and should be returned immediately upon request.
To check its validity telephone +44 (0) 345 080 9000. An electronic certificate can be authenticated online.

BSI Assurance UK Limited, registered in England under number 7805321 at 389 Chiswick High Road, London W4 4AL, UK.
A member of BSI Group of Companies.